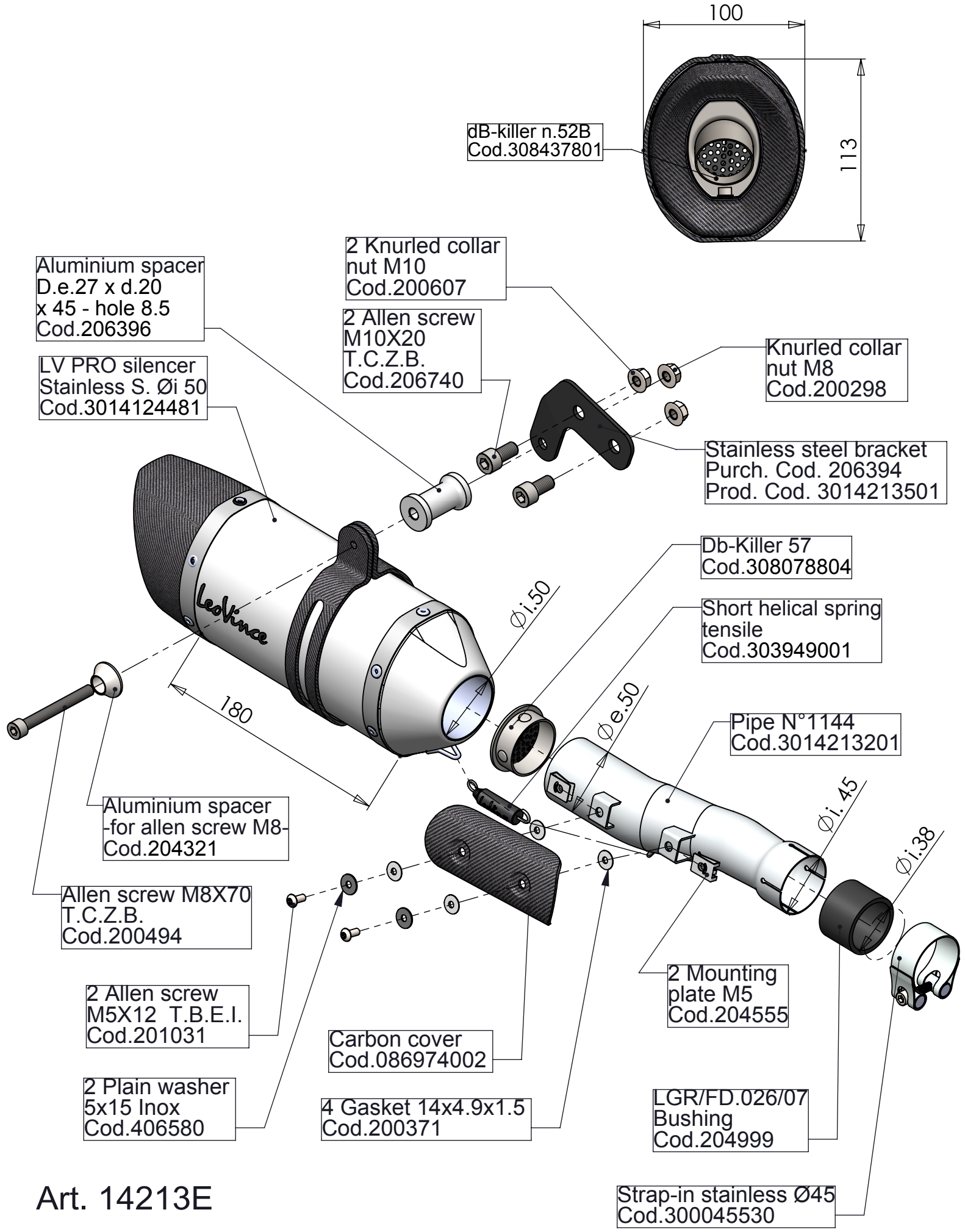

Art. 14213E

KYMCO AK550

SLIP-ON - "**LV PRO**" - STAINLESS STEEL