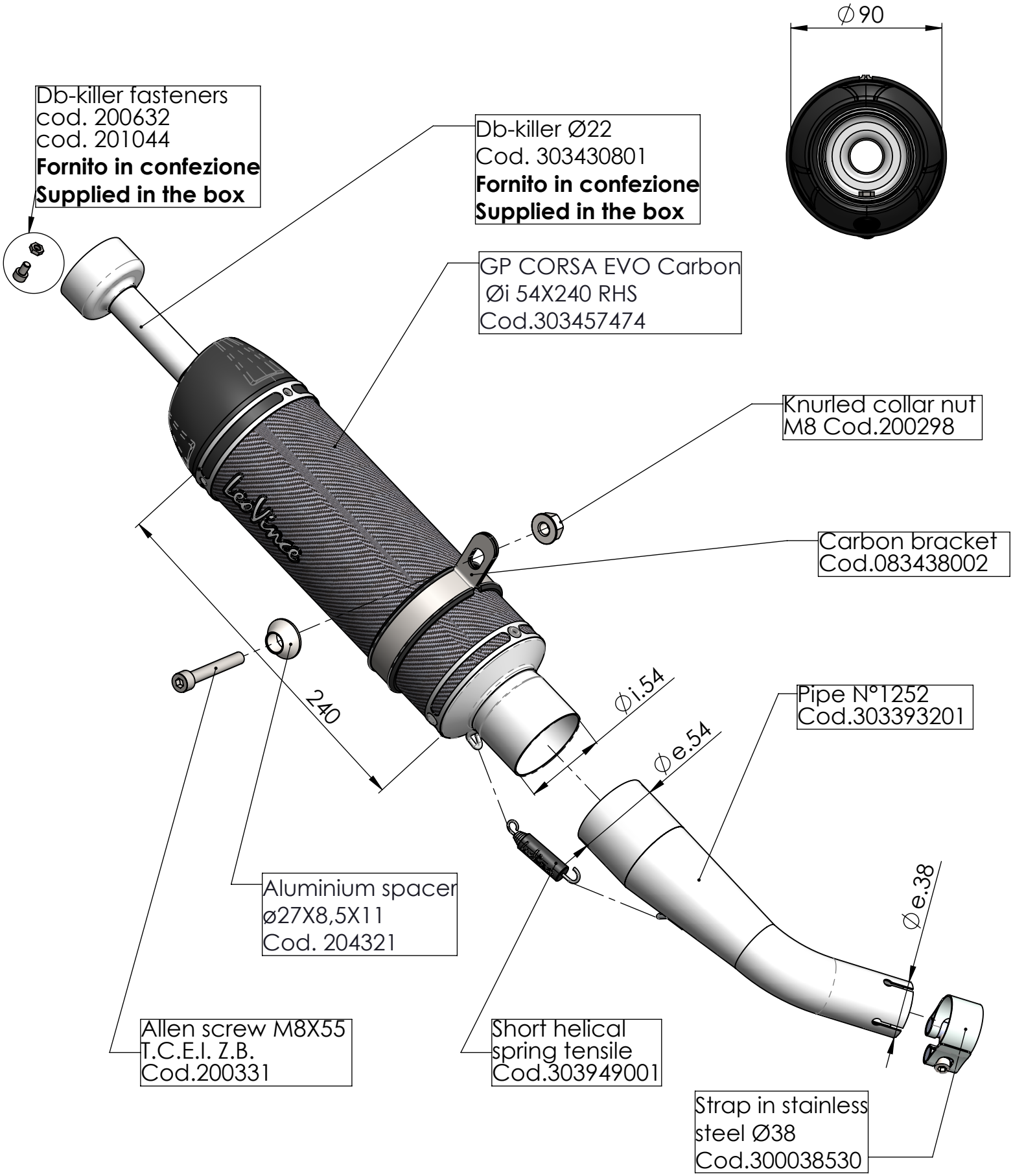

ART. 3393E

KAWASAKI NINJA 125 - Z 125

SLIP-ON - GP CORSA EVO - CARBON