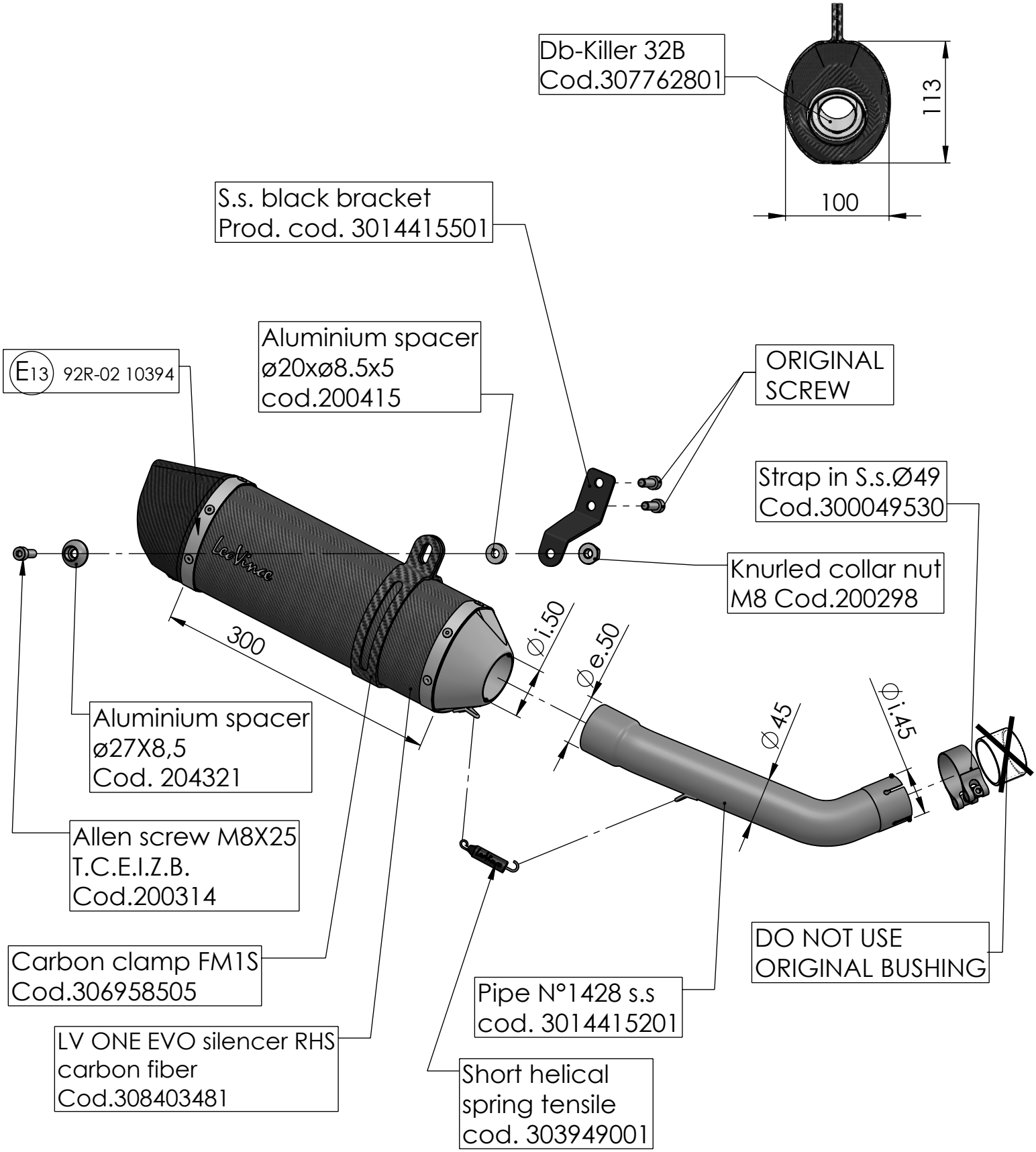

ART. 14416E

KTM RC 125 / RC 390

SLIP-ON - LV ONE EVO - CARBON - APPROVED